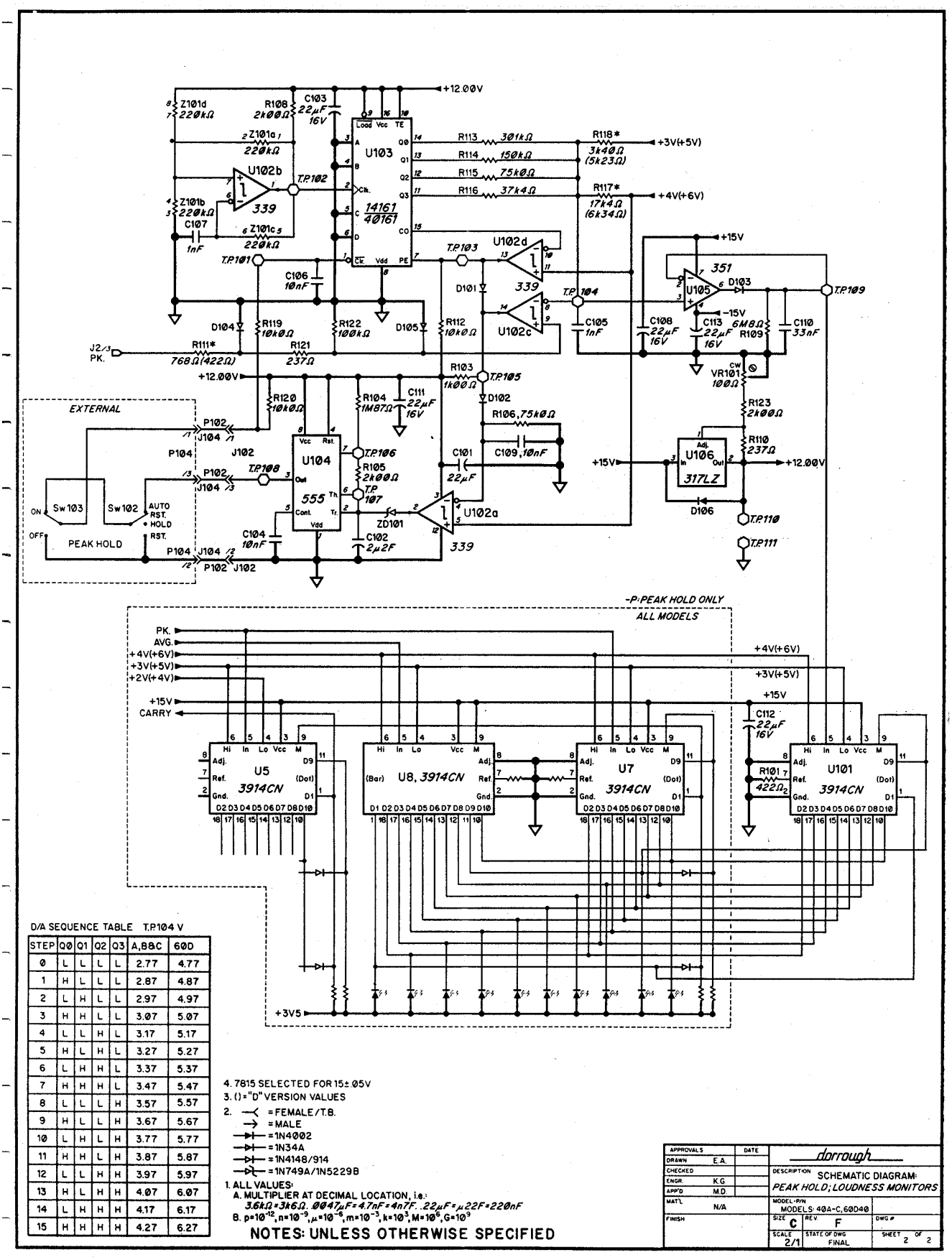

D/A SEQUENCE TABLE T.P.104 V

STEP	Q0	Q1	Q2	Q3	A,B&C	60D
0	L	L	L	L	2.77	4.77
1	H	L	L	L	2.87	4.87
2	L	H	L	L	2.97	4.97
3	H	H	L	L	3.07	5.07
4	L	L	H	L	3.17	5.17
5	H	L	H	L	3.27	5.27
6	L	H	H	L	3.37	5.37
7	H	H	H	L	3.47	5.47
8	L	L	L	H	3.57	5.57
9	H	L	L	H	3.67	5.67
10	L	H	L	H	3.77	5.77
11	H	H	L	H	3.87	5.87
12	L	L	H	H	3.97	5.97
13	H	L	H	H	4.07	6.07
14	L	H	H	H	4.17	6.17
15	H	H	H	H	4.27	6.27

4. 7815 SELECTED FOR 15±.05V
3. ( ) = "D" VERSION VALUES
2. = FEMALE / T.B.
= MALE
= 1N4002
= 1N34A
= 1N4148/914
= 1N749A/1N5229B
1. ALL VALUES:
A. MULTIPLIER AT DECIMAL LOCATION, i.e.:
3.6kΩ = 3k6Ω. .0047μF = 4.7nF = 4n7F. .22μF = μ22F = 220nF
B. $p=10^{-12}, n=10^{-9}, \mu=10^{-6}, m=10^{-3}, k=10^{3}, M=10^{6}, G=10^{9}$

NOTES: UNLESS OTHERWISE SPECIFIED

APPROVALS		DATE
DRAWN	E.A.	
CHECKED		
ENGR.	K.G.	
APP'D	M.D.	
MAT'L	N/A	
FINISH		

dorrough

DESCRIPTION: SCHEMATIC DIAGRAM: PEAK HOLD; LOUDNESS MONITORS

MODEL-P/N: MODELS: 40A-C, 60D40

SIZE C | REV. F | DWG #

SCALE 2/1 | STATE OF DWG FINAL | SHEET 2 OF 2